INVITATION TO BID

Notice is given hereby that

Sanborn County, Woonsocket, SD

Will accept bids for the **Addition to the 4-H & Agricultural Building** located at 23237 405th Avenue E, Forestburg, SD in accordance to the drawings and specifications prepared by L. L. Jirsa Architect.

The new addition includes a concrete foundation, pre-engineered metal building, overhead door, walk thru doors, windows, acoustical ceiling, two interior storage rooms and two handicap accessible restrooms, mechanical, electrical and plumbing work. The total building area for the new addition is 6,000 square feet single story structure.

Time and place of bid opening: Sealed bids will be received until 4:30 PM local time on Friday September 30, 2022 at the Sanborn County Auditor's Office located at 604 W. 6th St, Woonsocket, SD 57385, or by mailing bids to PO Box 7, Woonsocket, SD 57385. Bids will be opened at 10:00 AM on October 4, 2022, on 2nd floor in the Commissioner Room, with Sanborn County Commissioners present.

Bona fide general contract bidders may view copy of the proposed Contract Documents by contacting L. L. Jirsa Architect by email; lljirsa@mitchelltelecom.net for an electronic copy of the plans and specifications at no cost or request a hard copy by mail from the Sanborn County Auditor with a $50.00 non-refundable plan reproduction fee.

Bid Security: Bid Bond in the amount of 10% of the bid price or in lieu of a bid bond, a cashier's check in the amount of 5% of the bid shall be required to be submitted with the bid.

Contract Security: The Low Bidder to whom a contract is awarded shall furnish a Performance Bond, Payment Bond in an amount equal to the contract price. Successful Bidder shall also provide a certificate of insurance as required in the Supplemental Conditions.

Bid rejection/Acceptance: Owner reserves the right to reject any and all Bids, waive informalities in bidding, or to accept the Bid or Bids, which best serve the interest of the Owner.

Bid Withdrawal: No bid shall be withdrawn for a period of 30 days after the opening of Bids without the consent of the Owner. Unopened Bids may be withdrawn prior to the scheduled time if the bid opening.

INVITATION TO BID

PROJECT:

ADDITION TO 4-H BUILDING
23237 405TH AVENUE E
FORESTBURG, SD 57314

OWNER:

SANBORN COUNTY
604 W. 6TH STREET P.O. BOX 7
WOONSOCKET, SD 57385

ARCHITECT:

L.L. JIRSA ARCHITECT
P.O. BOX 925
MITCHELL, SD 57301
605-770-6424
email: lljirsa@mitchelltelecom.net

SCOPE OF WORK:

ADD 60'x100' PRE-ENGINEERED METAL BUILDING TO EXISTING METAL BUILDING. NEW BUILDING METAL ROOF AND METAL WALL PANELS TO MATCH PROFILE AN COLOR OF EXISTING METAL PANELS. INTERIOR TO HAVE SUSPENDED ACOUSTICAL CEILING AND SEALED CONCRETE FLOOR TO MATCH EXISTING CEILING AND FLOOR. NEW INTERIOR WALLS TO BE FRAMED WITH METAL OR WOOD STUDS @ CONTRACTOR'S OPTION. NEW HANDICAP ACCESSIBLE RESTROOMS TO BE TIED INTO EXISTING PLUMBING SYSTEM. PLUMBING CONTRACTOR REQUIRED TO VERIFY EXISTING PLUMBING CONDITIONS. NEW HVAC UNIT OR UNITS TO BE SIMILAR TO EXISTING SPLIT SYSTEM HVAC UNITS. FIELD VERIFY EXISTING CONDITIONS. NEW ELECTRICAL WORK TO BE TIED INTO EXISTING ELECTRICAL SYSTEM AND SERVICE CAPACITY TO BE INCREASED AS REQUIRED TO COMPLY WITH ELECTRICAL CODE. EXISTING FIELD CONDITIONS TO BE VERIFIED BY ELECTRICAL CONTRACTOR, MECHANICAL, ELECTRICAL AND PLUMBING WORK SHALL BE DESIGN/BUILD BY SUB-CONTRACTORS TO COMPLY WITH CODES AND LOCAL ORDINANCES.

DRAWING INDEX

SHEET NO.	SHEET TITLE
CS-1	COVER SHEET, DRAWING INDEX, CODE REFERENCE
A-1	FLOOR PLAN
A-2	ENLARGED RESTROOMS FLOOR PLAN
A-3	EXTERIOR ELEVATIONS
A-4	WALL SECTIONS
A-5	REFLECTED CEILING PLAN
A-6	DETAILS
S-1	FOUNDATION PLAN
S-2	FOUNDATION DETAILS
P-1	PLUMBING PLAN
M-1	HVAC PLAN
E-1	ELECTRICAL PLAN

BUILDING DATA

EXISTING BUILDING - 6,000 SF - SINGLE STORY - NON-SPRINKLERED
NEW ADDITION - 6,000 SF - SINGLE STORY - NON-SPRINKLERED
TOTAL BUILDING SF - 12,000 SF

OCCUPANT LOAD

BASIS OF CALCULATION: UNCONCENTRATED (TABLES AND CHAIRS) - 15 NET SF PER PERSON

EXISTING BUILDING OPEN SPACE = 4,300 SF ÷ 15 SF/PERSON = 286 OCCUPANTS

NEW ADDITION OPEN SPACE = 5,200 SF ÷ 15 SF/PERSON = 346 OCCUPANTS

632 TOTAL OCCUPANTS W/ UNCONCENTRATED USE

CODE REVIEW - 2021 IBC

OCCUPANCY CLASSIFICATION - A-3
CONSTRUCTION TYPE III B
ALLOWABLE SQ.FT. NON-SPRINKLERED - 9,500 SF, 2-STORY
FRONTAGE INCREASE ALLOWED - +75% = 7,125 SF
TOTAL ALLOWABLE NON-SPRINKLERED SF - 16,625 SF

DESIGN/BUILD CODE COMPLIANCE FOR THE FOLLOWING:

2015 - UNIFORM PLUMBING CODE
2021 - INTERNATIONAL MECHANICAL CODE
2020 - NATIONAL ELECTRICAL CODE
2010 - AMERICANS WITH DISABILITIES ACT (ADA) DESIGN GUIDELINES

L.L. JIRSA ARCHITECT
PO BOX 925
MITCHELL, SD 57301
605.770.6424
email: lljirsa@mitchelltelecom.net

REGISTERED ARCHITECT
REG. NO. 4995
LARRY L. JIRSA
SOUTH DAKOTA
8-24-22

PROJECT NAME: ADDITION TO 4-H BUILDING 23237 405TH AVE E FORESTBURG, SD

REVISIONS

NO.	DATE	DESCRIPTION

PROJECT NO. 703-2022
DATE AUG 24, 2022
SHEET TITLE: COVER SHEET
SHEET NO. CS-1

GENERAL NOTES:

1. LOCATE NEW DOORS & EXISTING WINDOW. REMOVE WINDOW AND WALL BELOW WINDOW. ADD DOUBLE WOOD OR METAL STUDS @ JAMBS OF NEW DOORS, FIELD VERIFY WALL THICKNESS FOR WIDTH OF JAMB MEMBERS. TRIM OUT JAMB RETURNS ON NEW ADDITION SIDE WITH 5/8" THK GYP. BD. REINSTALL WINDOW ON EAST EXTERIOR WALL THAT WAS REMOVED FROM EXISTING BUILDING NORTH WALL.

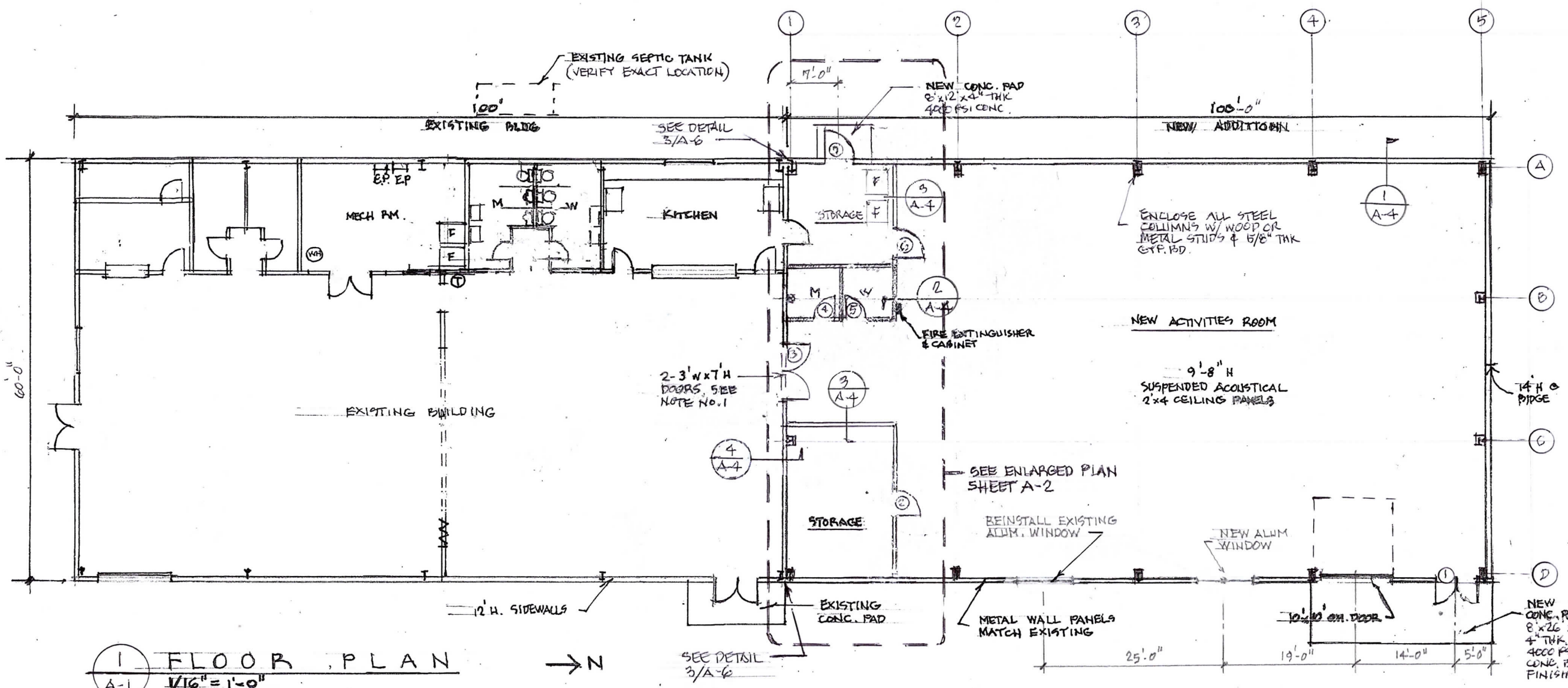

1 / A-1 FLOOR PLAN
1/16" = 1'-0"

L.L. JIRSA, ARCHITECT
P.O. BOX 935
MITCHELL, S.D. 57301
605-770-6424
email: ljirsa@midconetwork.com

REGISTERED ARCHITECT
REG. NO. 4995
LARRY L. JIRSA
SOUTH DAKOTA
8-24-22

PROJECT NAME: ADDITION TO 4-H BUILDING
23237 405TH AVE
FORESTBURG, SD

REVISIONS

NO.	DATE	DESCRIPTION

PROJECT NO. 703-2022
DATE: AUG 24, 2022
SHEET TITLE: FLOOR PLAN
SHEET NO. A-1

DOOR SCHEDULE

DOOR NO.	DOOR SIZE	DOOR TYPE	FRAME TYPE	JAMB	HEAD	HARDWARE SET
1	PR 3'-0" x 7'-0"	A	H.M	PMBM	PMBM	1
2	4'-0" x 7'-0"	B		2	4	2
3	PR 3'-0" x 7'-0"	C		3	4	3
4	3'-0" x 7'-0"	D		1	4	4
5	3'-0" x 7'-0"	D		1	4	4
6	4'-0" x 7'-0"	B		2	4	2
7	4'-0" x 7'-0"	E		PMBM	PMBM	5

PMBM - PRE-ENGINEERED METAL BUILDING MANUFACTURER DETAILS AS PER SHOP DRAWINGS

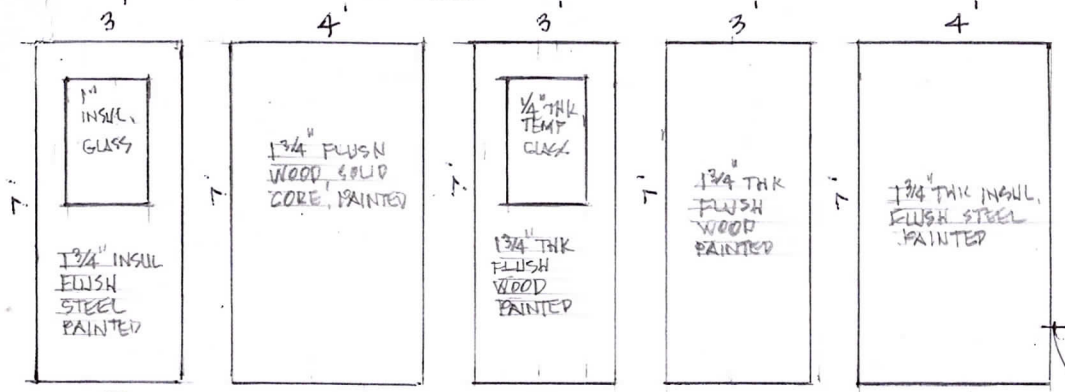

DOOR TYPES

1/4" = 1'-0"

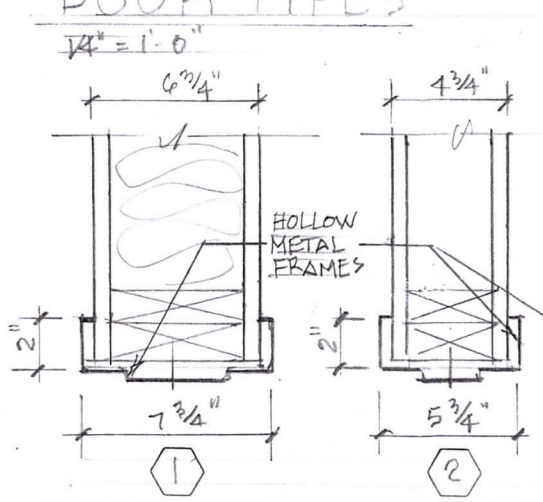

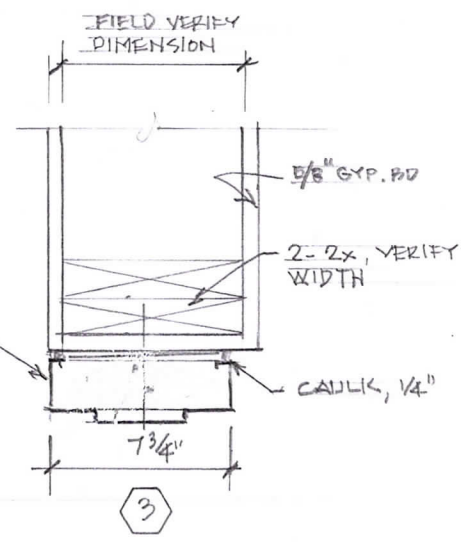

JAMB SECTIONS

1½" = 1'-0"

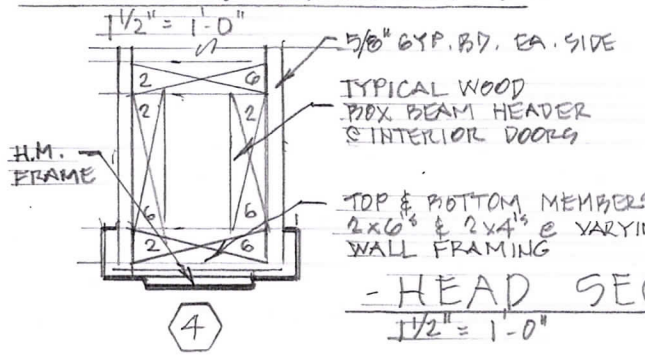

HEAD SECTIONS

1½" = 1'-0"

HARDWARE SETS

SET NO.1 DOOR NO.1
- 3 PR - HINGES
- 2 - CLOSERS
- 2 - EXIT DEVICE
- WEATHERSTRIP
- ALUM SADDLE
- 2 - DOOR BOTTOMS
- 2 - LEVER LOCKSETS

SET NO.2 DOOR NO'S 2 & 6
- 1½ PR HINGES
- 1 - PASSAGE LATCHSET

SET NO.3 DOOR NO.3
- 3 - PR HINGES
- 2 - CLOSERS
- 2 - PUSH PLATES
- 2 - PULL PLATES
- 2 - KICK DOWN - HOLD OPENS

SET NO.4 DOOR NO'S 4 & 5
- 1½ PR. HINGES
- 1 - SOUND SEALE FRAME
- 1 - PRIVACY LOCKSET

SET NO.5 DOOR NO.7
- 1½ PR. - HINGES
- 1 - CLOSER
- 1 - ALUM SADDLE
- 1 - DOOR BOTTOM
- 1 - LEVER LOCKSET
- WEATHERSTRIP

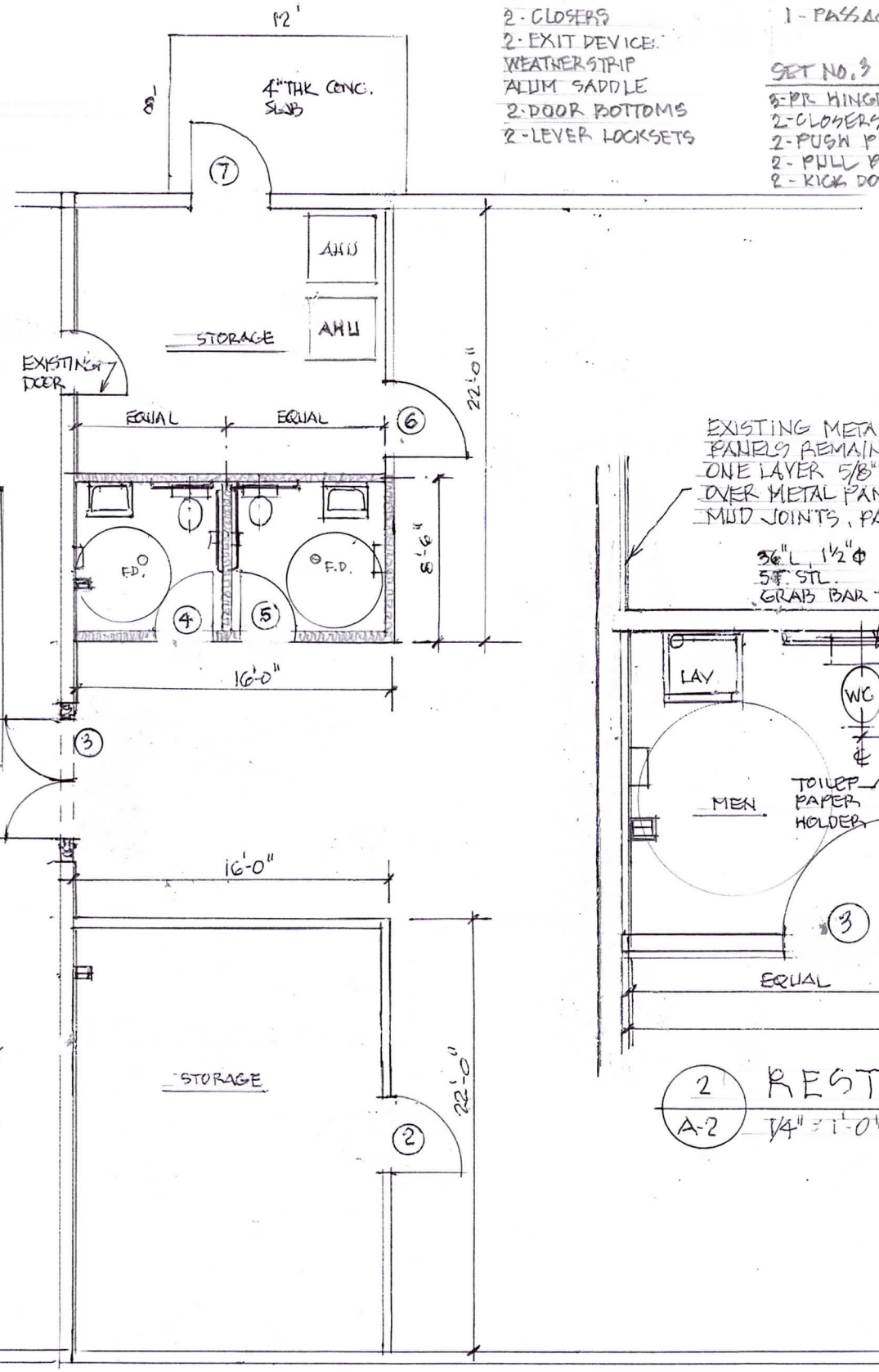

1 / A-2 ENLARGED PLAN

1/8" = 1'-0"

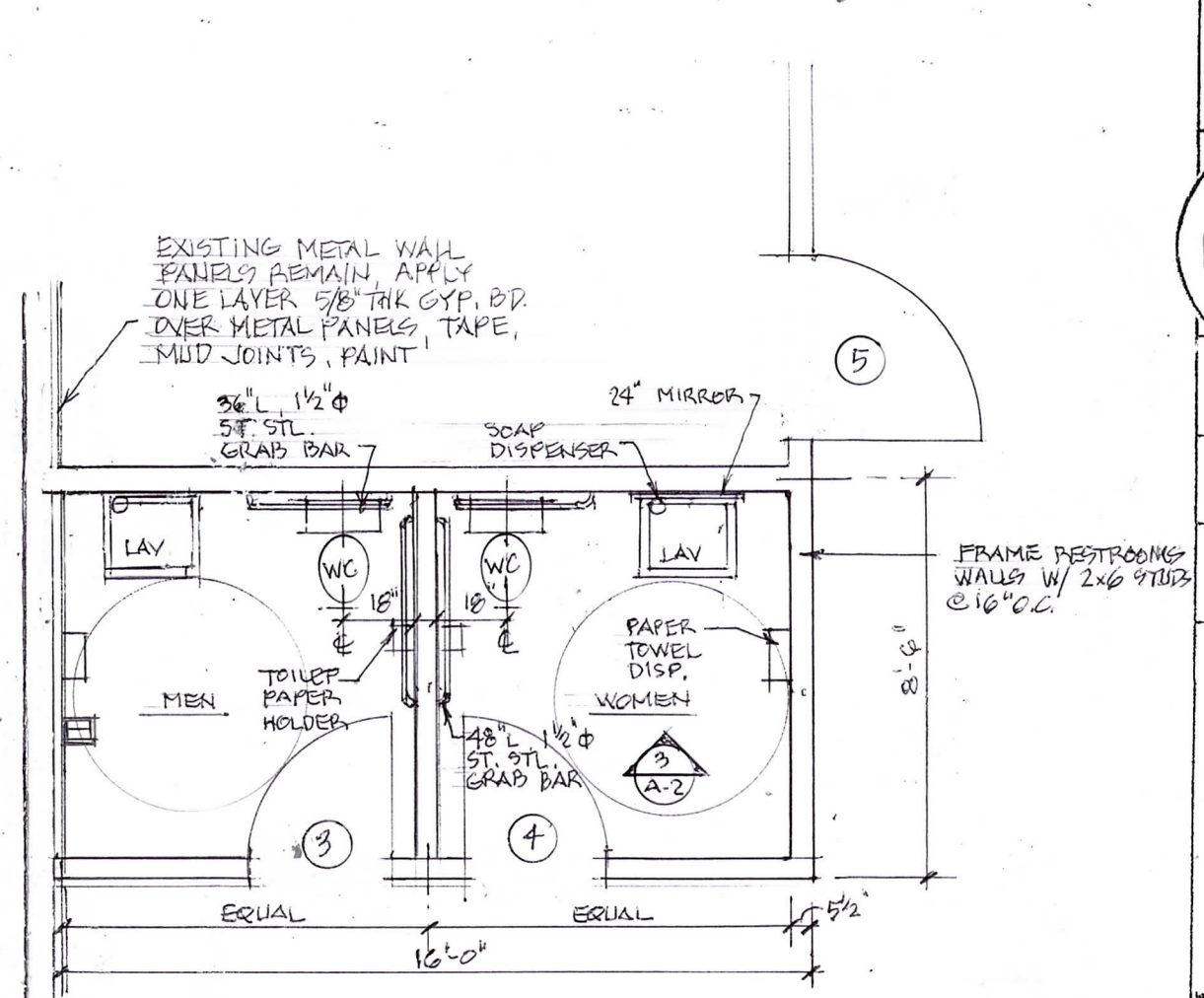

2 / A-2 RESTROOMS PLAN

1/4" = 1'-0"

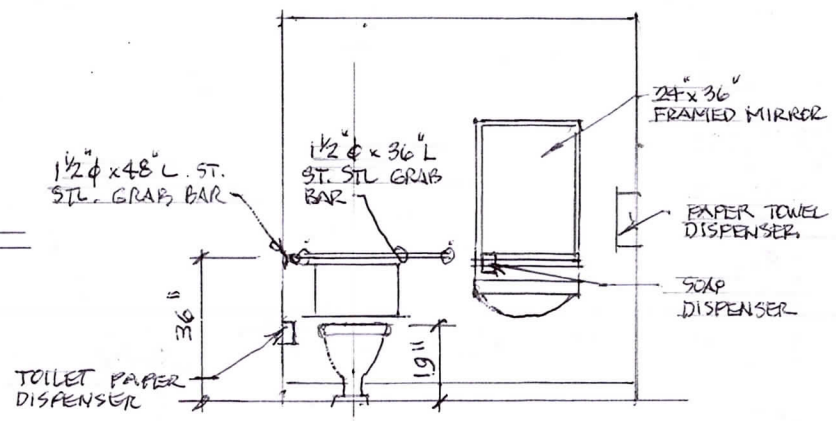

3 / A-2 ELEVATION

1/4" = 1'-0"

L.L. JIRSA ARCHITECT
PO BOX 929
MITCHELL, SD 57301
605-770-6404
email: ljjirsa@mitchell.midco.net

REGISTERED ARCHITECT
REG. NO. 4995
LARRY L. JIRSA
SOUTH DAKOTA
8-24-22

PROJECT NAME: ADDITION TO 4-H BUILDING 29237 405TH AVE FORESTBURG, SD

REVISIONS

NO.	DATE	DESCRIPTION

PROJECT NO. 703-2022

DATE AUG 24, 2022

SHEET TITLE: ENLARGED PLANS

SHEET NO. A-2

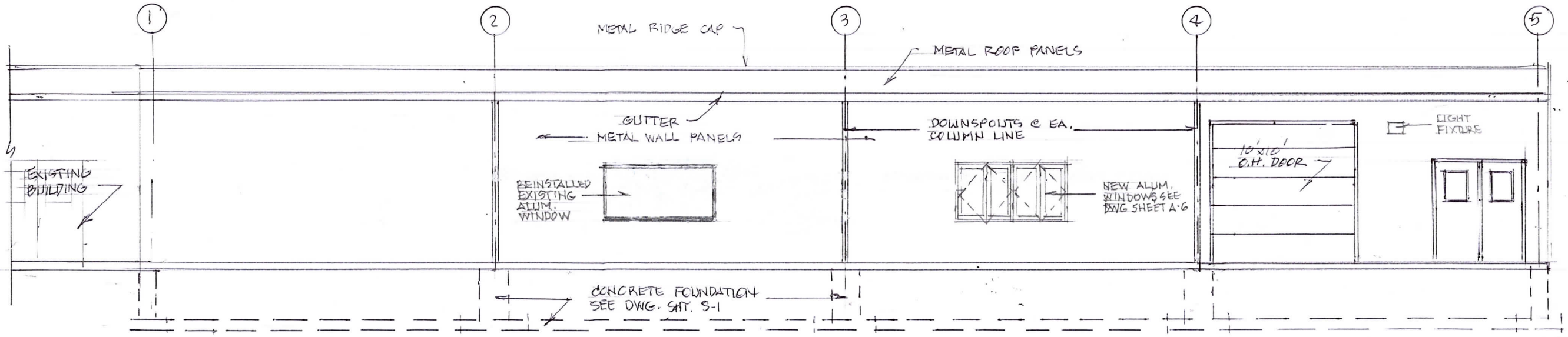

1/A-3 EAST ELEVATION

1/8" = 1'-0"

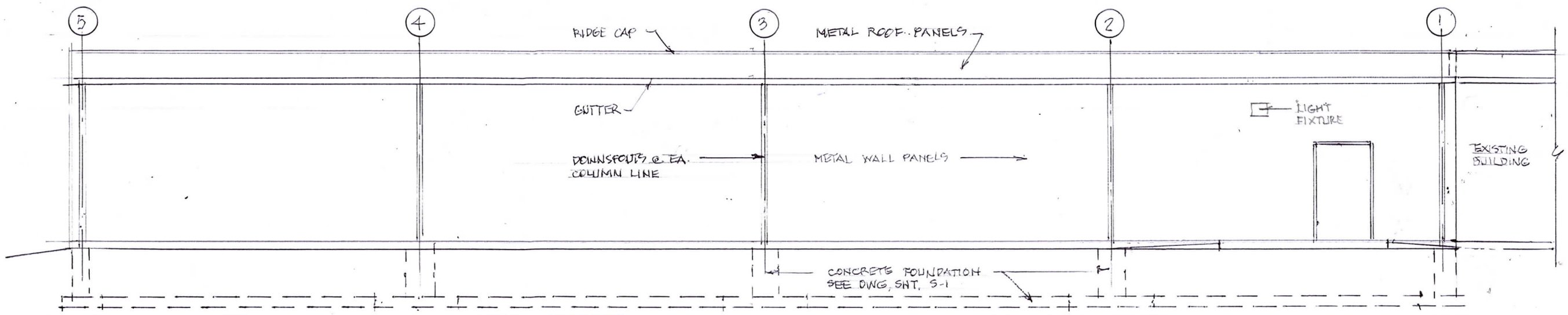

2/A-3 WEST ELEVATION

1/8" = 1'-0"

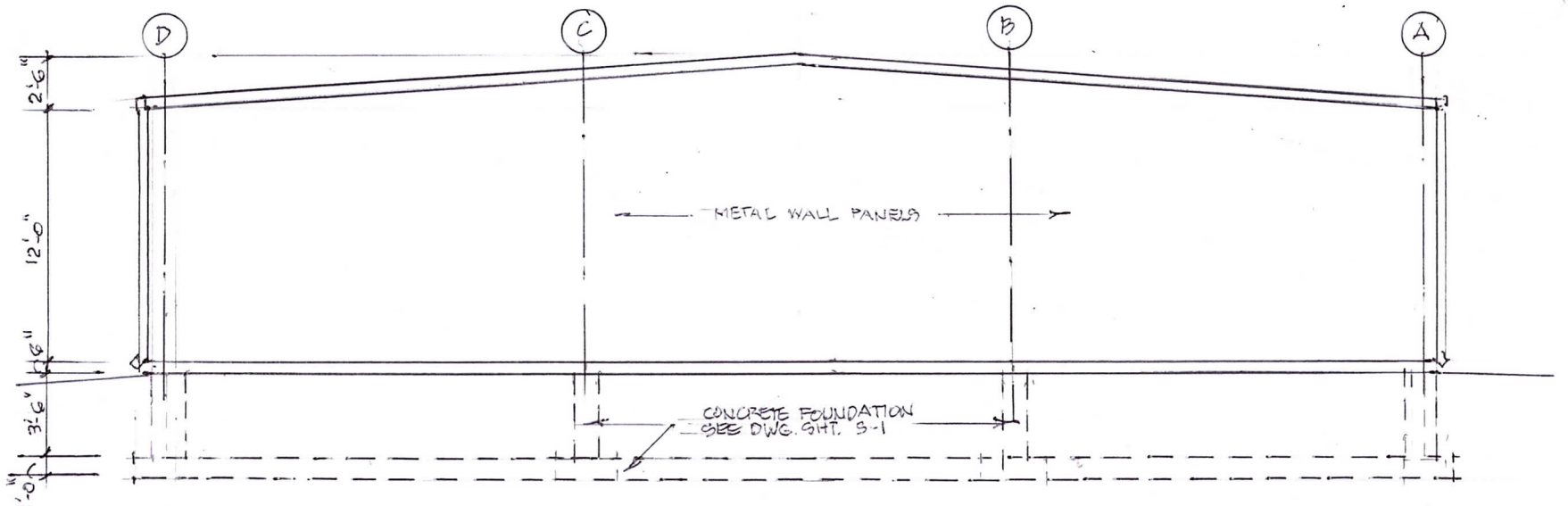

3/A-3 NORTH ELEVATION

1/8" = 1'-0"

L.L. JIRSA ARCHITECT
PO BOX 929
MITCHELL, SD 57301
605.770.6404
email: ljirsa@mitchelltelecom.net

REGISTERED ARCHITECT
REG. NO. 4995
LARRY L. JIRSA
SOUTH DAKOTA
8-24-22

PROJECT NAME
ADDITION TO 4-H BUILDING
23237 405TH AVE
FORESTBURG, SD

REVISIONS

NO.	DATE	DESCRIPTION

PROJECT NO.
703-2022

DATE
AUG 24, 2022

SHEET TITLE
EXTERIOR ELEVATIONS

SHEET NO.
A-3

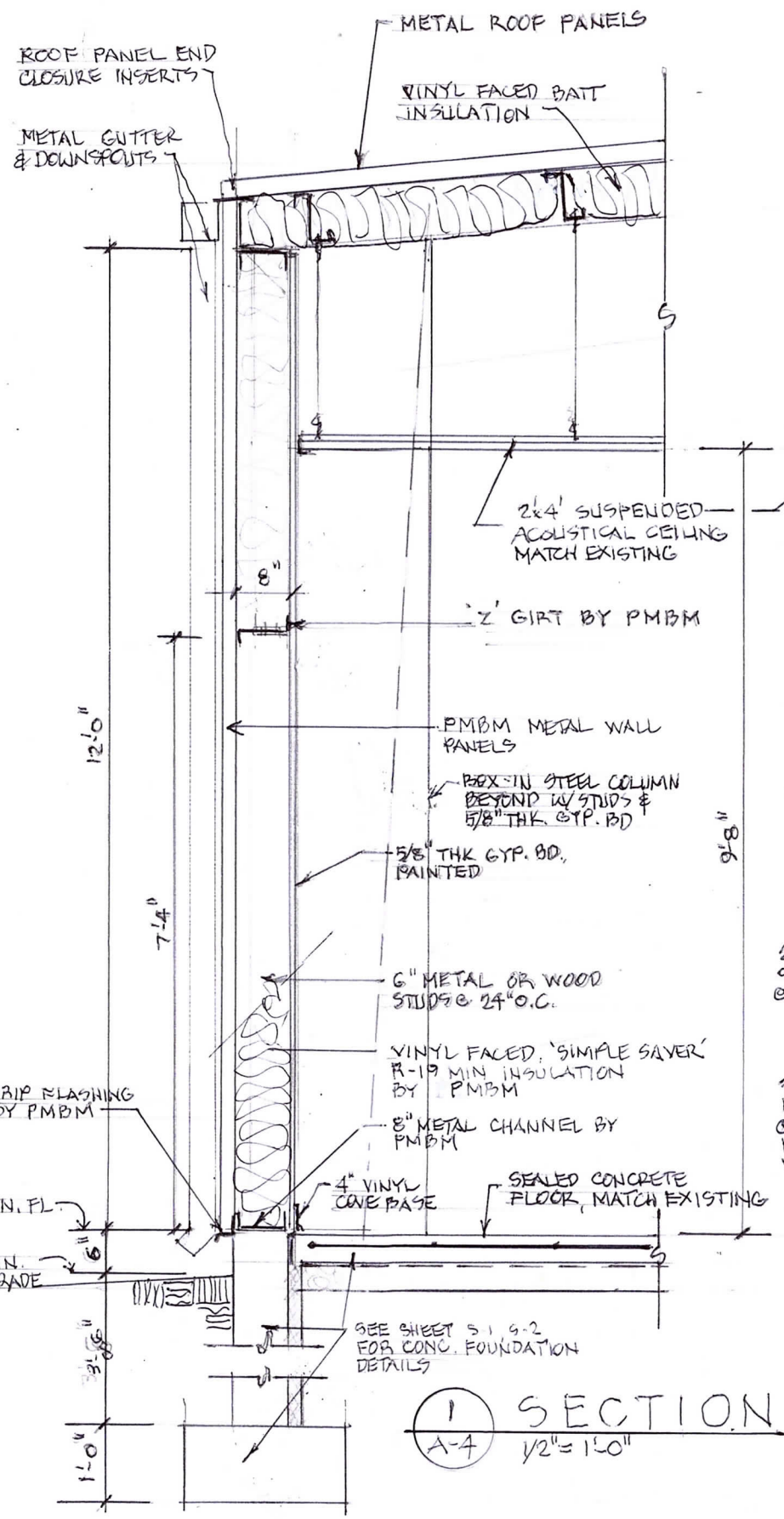

1 A-4 SECTION 1/2" = 1'-0"

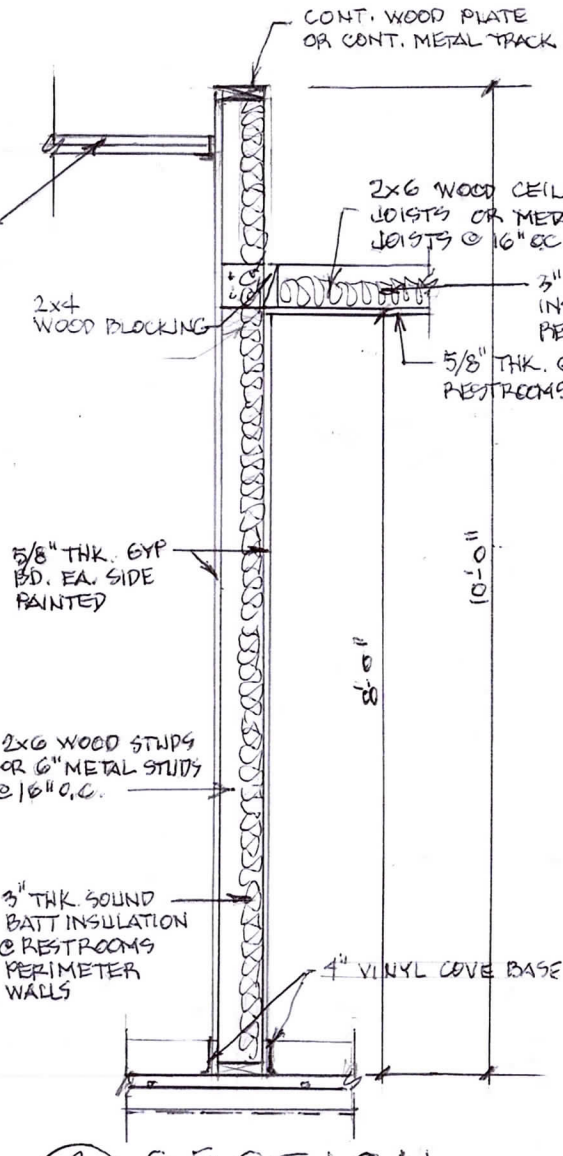

2 A-4 SECTION 1/2" = 1'-0"

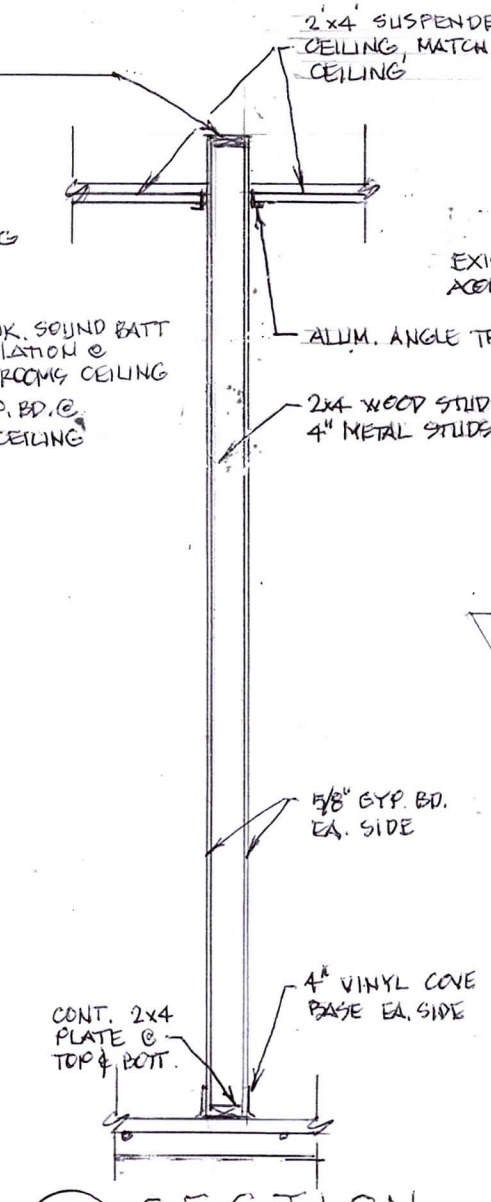

3 A-4 SECTION 1/2" = 1'-0"

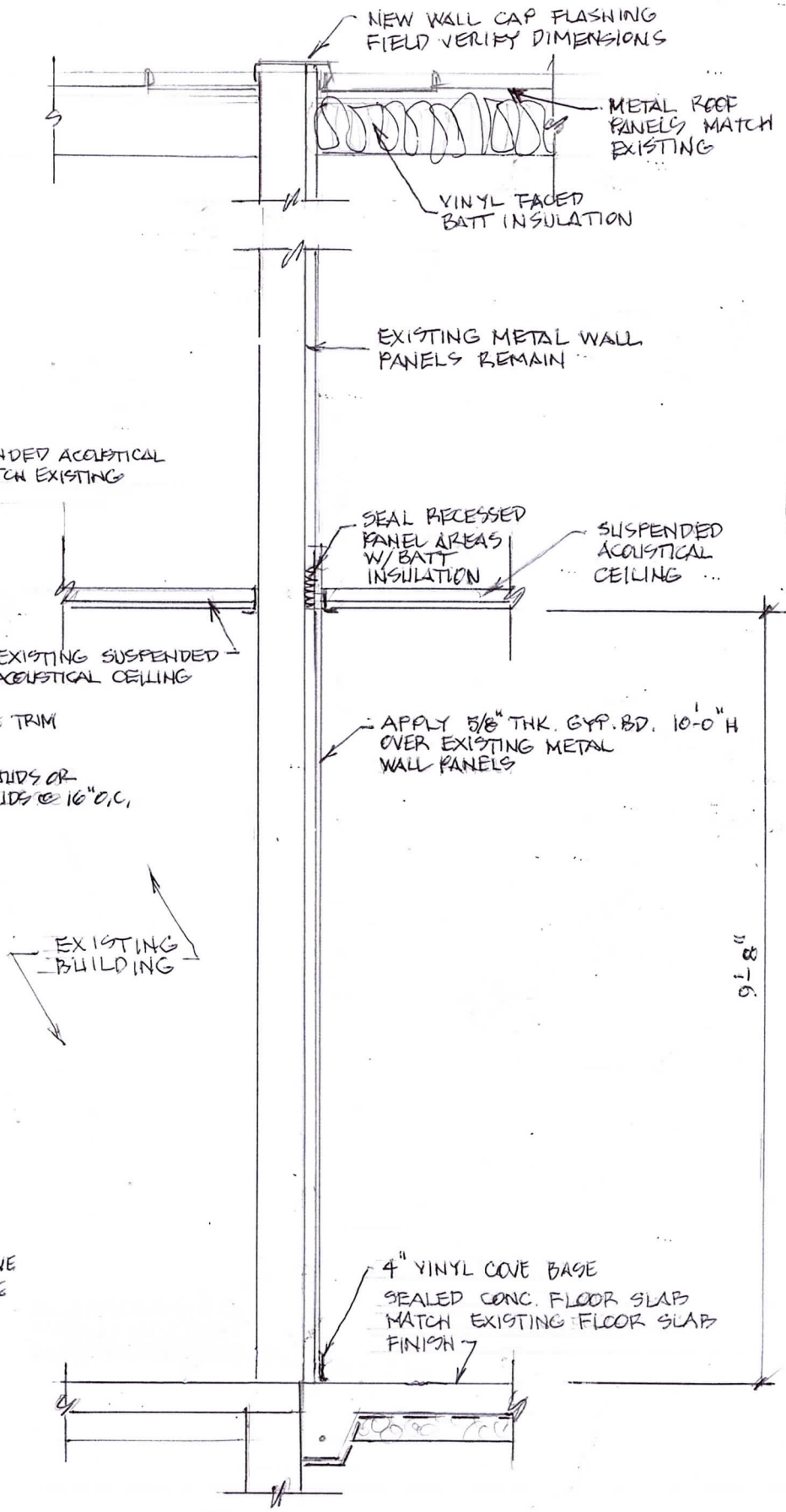

4 A-4 SECTION 1/2" = 1'-0"

L.L. JIRSA ARCHITECT
PO BOX 929
MITCHELL, SD 57301
605.770.6464
email: ljirsa@midconetwork.com

REGISTERED ARCHITECT
REG. NO. 4995
LARRY L. JIRSA
SOUTH DAKOTA
8-24-22

PROJECT NAME
ADDITION TO 4-H BUILDING
23237 405TH AVE E.
FORESTBURG, SD

REVISIONS

NO.	DATE	DESCRIPTION

PROJECT NO. 709-2022
DATE AUG 24, 2022
SHEET TITLE WALL SECTIONS
SHEET NO. A-4

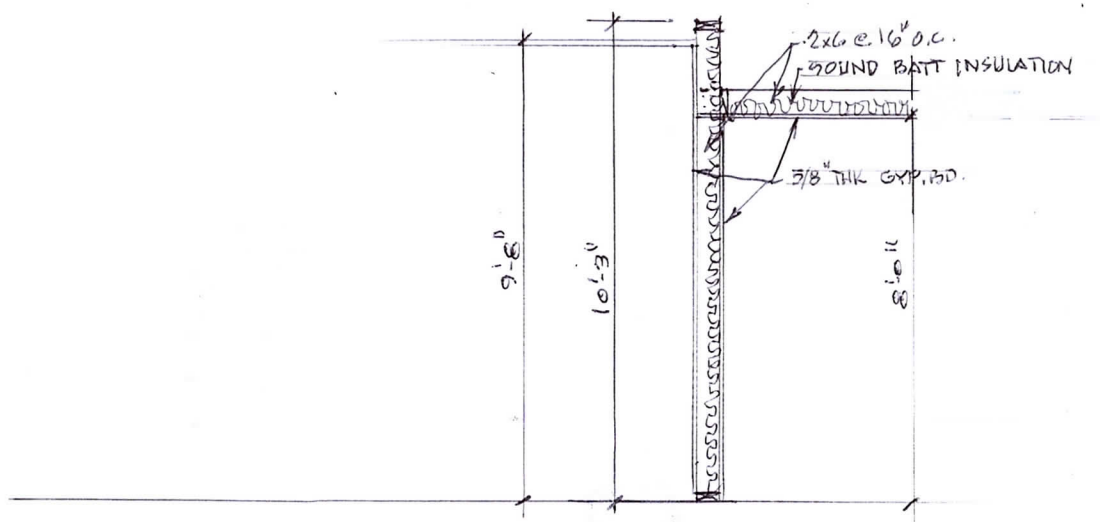

2 / A-5 SECTION
1/4" = 1'-0"

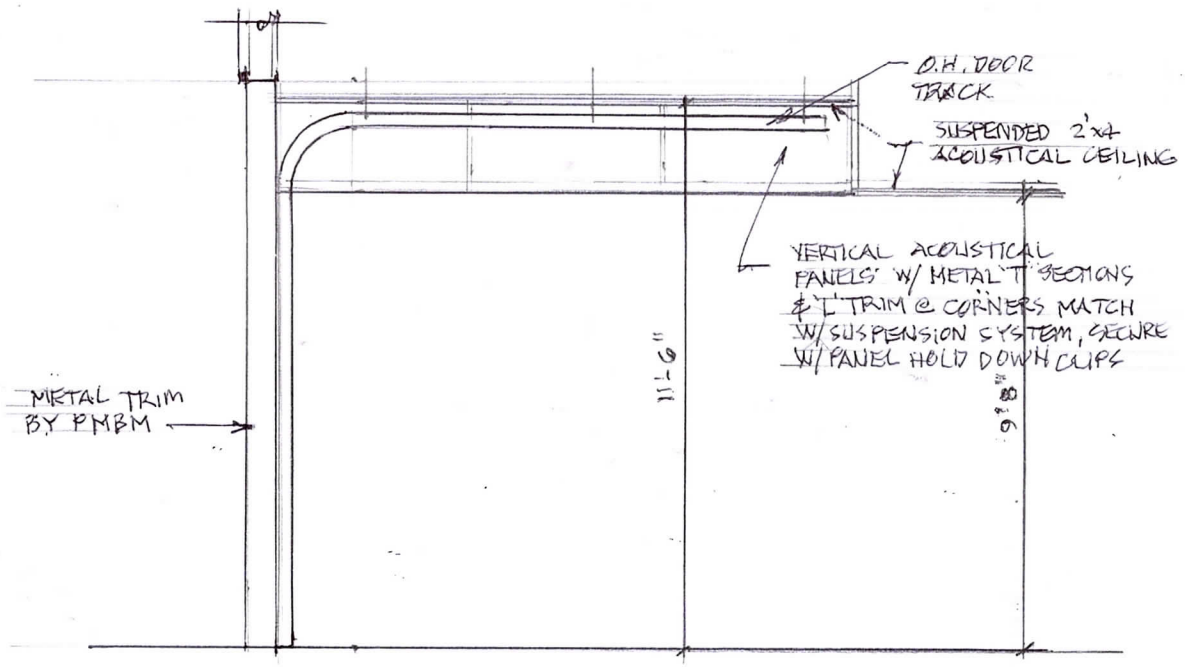

3 / A-5 SECTION
1/4" = 1'-0"

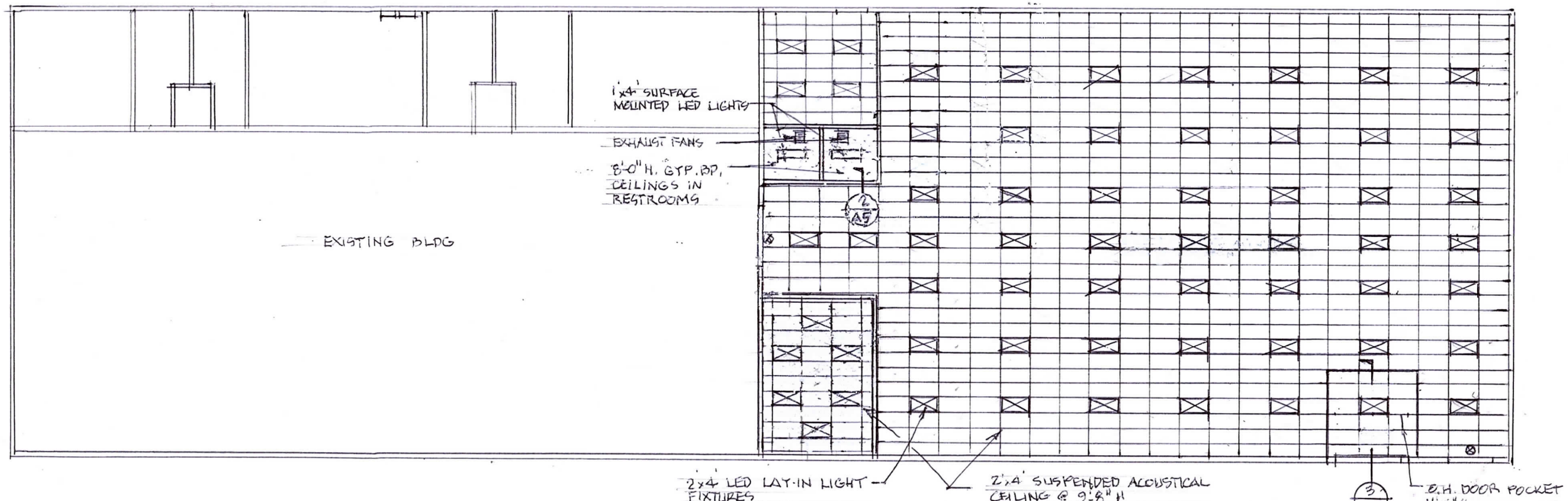

1 / A-5 REFLECTED CEILING PLAN
1/16" = 1'-0"

NOTE: MECHANICAL CONTRACTOR TO COORDINATE LOCATION OF AIR SUPPLY CEILING DIFFUSERS WITH LIGHT FIXTURES. SUBMIT SHOP DRAWINGS TO COORDINATE WORK WITH ELECTRICAL CONTRACTOR.

L.L. JIRSA ARCHITECT
PO BOX 925
MITCHELL, SD 57301
605-770-6424
email: lljirsa@mitchelltelecom.net

REGISTERED ARCHITECT
REG. NO. 4995
LARRY L. JIRSA
SOUTH DAKOTA
8-24-22

PROJECT NAME
ADDITION TO 4-H BUILDING
23237 405TH AVE E
FORESTBURG, SD

REVISIONS

NO.	DATE	DESCRIPTION

PROJECT NO.
703 - 2022

DATE
AUG 24, 2022

SHEET TITLE
REFLECTED CEILING PLAN

SHEET NO.
A-5

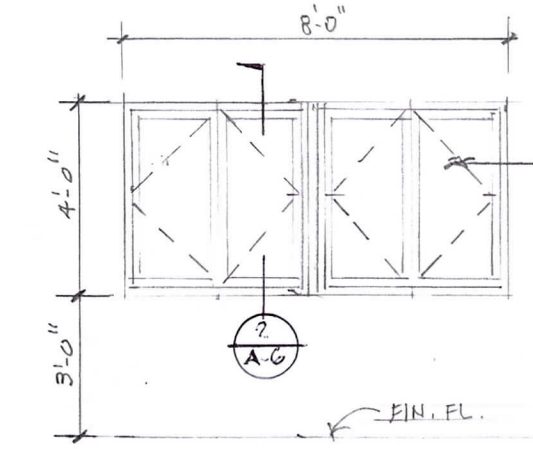

THERMAL BREAK TYPE ALUMINUM OUTSWINGING CASEMENT WINDOWS W/ SCREENS W/1" INSULATED LOW E GLASS

1 / A-6 WINDOW ELEVATION
1/4" = 1'-0"

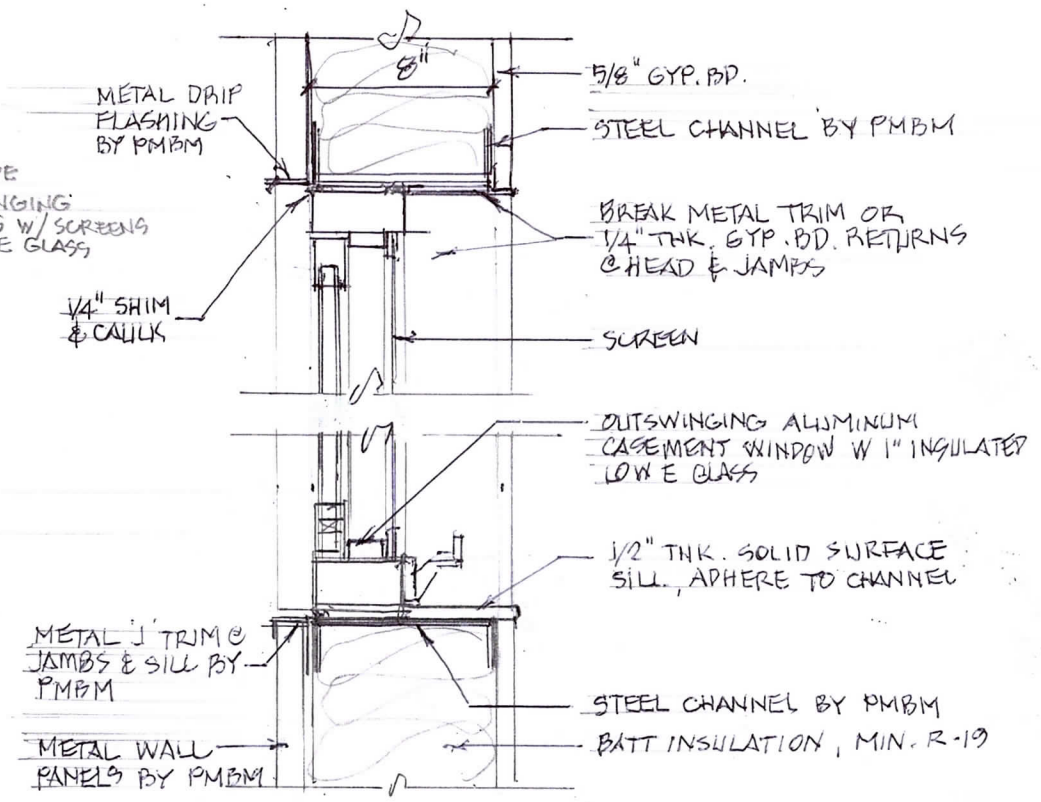

2 / A-6 SECTION
1 1/2" = 1'-0"

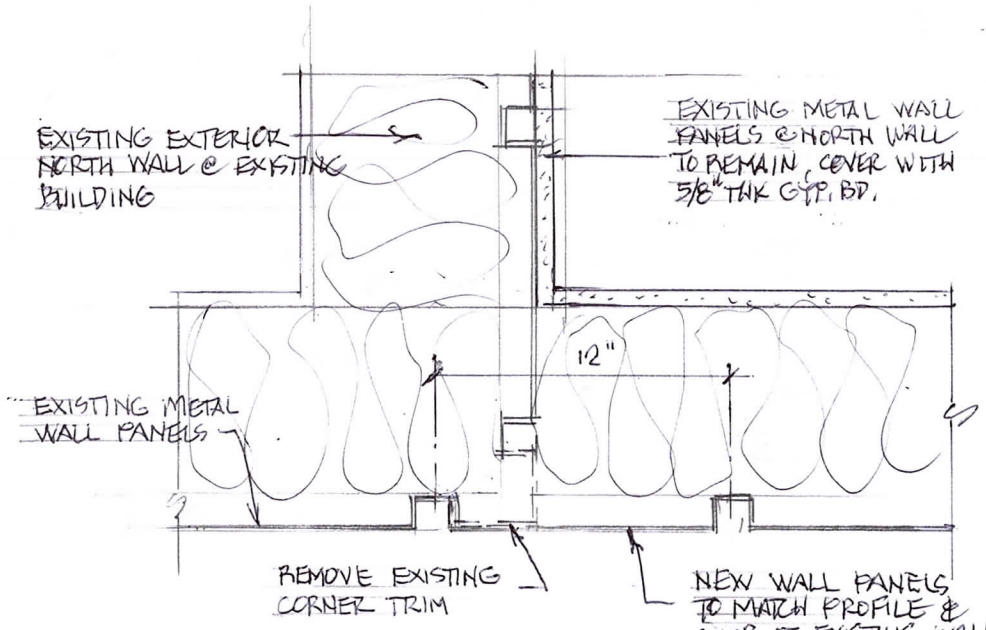

3 / A-6 PLAN DETAIL
1 1/2" = 1'-0"

L.L. JIRSA ARCHITECT
PO BOX 929
MITCHELL, SD 57301
605-770-6484
email: ljirsaarchitect@gmail.com

REGISTERED ARCHITECT
REG. NO. 4995
LARRY L. JIRSA
SOUTH DAKOTA
8-24-22

PROJECT NAME
ADDITION TO 4-H BUILDING
23237 405TH AVE. E
FORESTBURG, SD

REVISIONS

NO.	DATE	DESCRIPTION

PROJECT NO. 703-2022
DATE AUG 24, 2022
SHEET TITLE DETAILS
SHEET NO. A-6

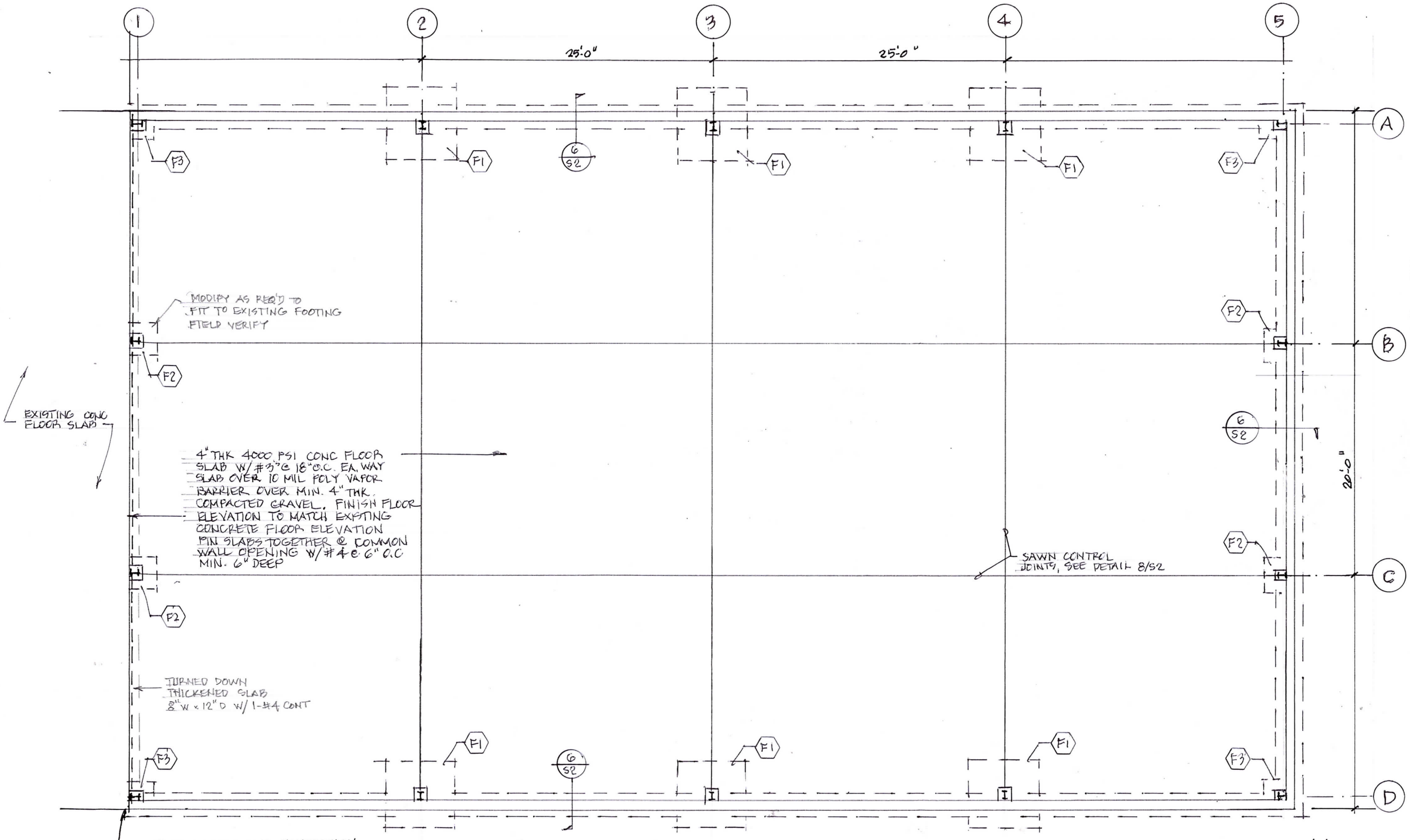

1 / S-1 FOUNDATION PLAN

1/8" = 1'-0"

L.L. JIRSA ARCHITECT
MITCHELL, SD 57301
o. 605
email: ljirsaarchitect@mitchelltelecom.net

REGISTERED ARCHITECT
REG. NO. 4995
LARRY L. JIRSA
SOUTH DAKOTA
8-24-22

PROJECT NAME: ADDITION TO 4-H BUILDING
23237 405TH AVE E
FORESTBURG, SD

REVISIONS

NO.	DATE	DESCRIPTION

PROJECT NO. 703-2022
DATE AUG 24, 2022
SHEET TITLE FOUNDATION PLAN
SHEET NO. S-1

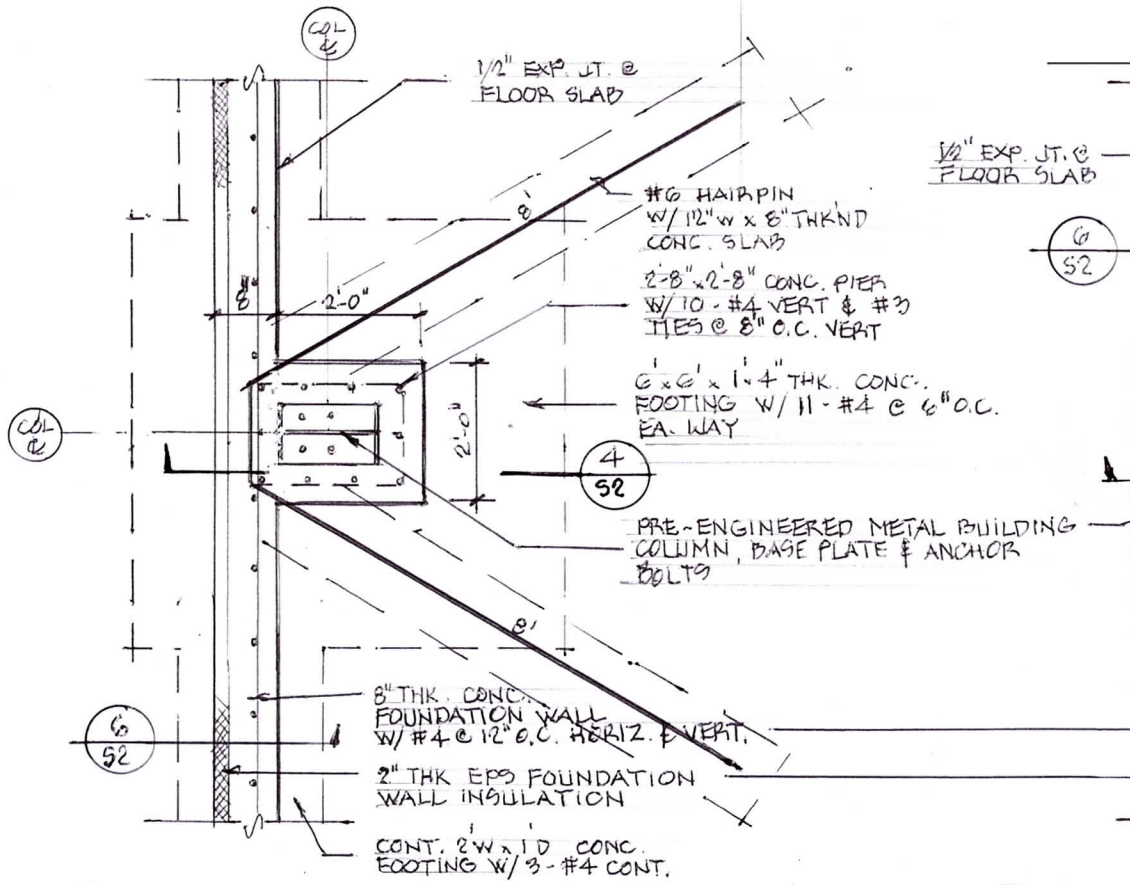

1 S2 F1 FOOTING PLAN
3/8" = 1'-0"

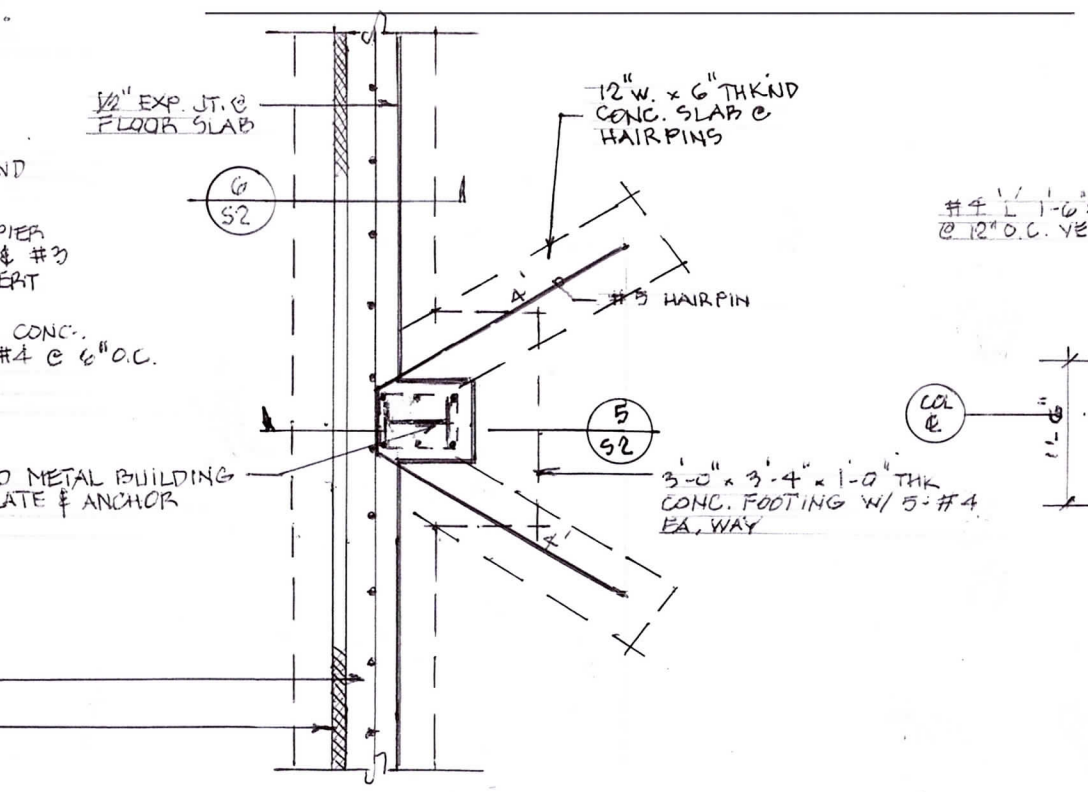

2 S2 F2 FOOTING PLAN
3/8" = 1'-0"

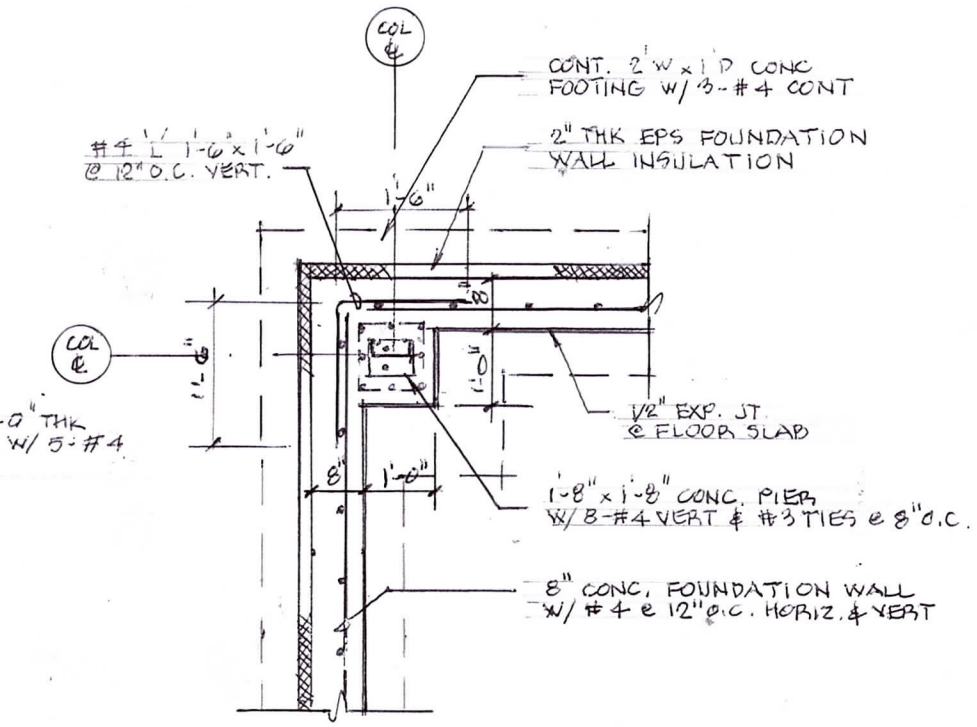

3 S2 F3 FOOTING PLAN
3/8" = 1'-0"

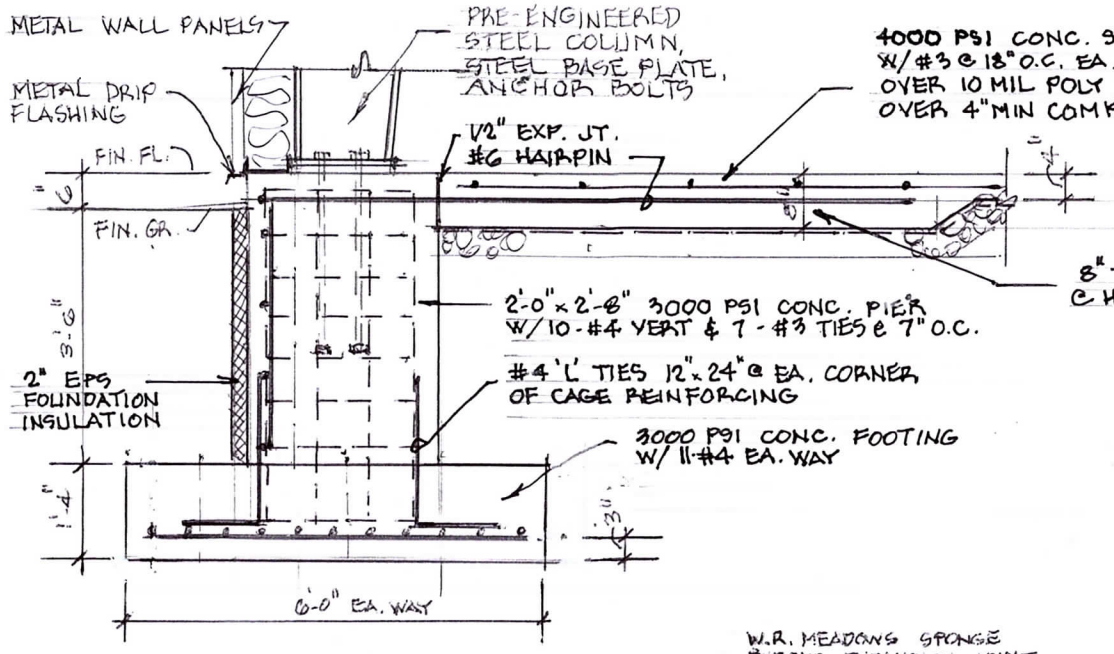

4 S2 SECTION
3/8" = 1'-0"

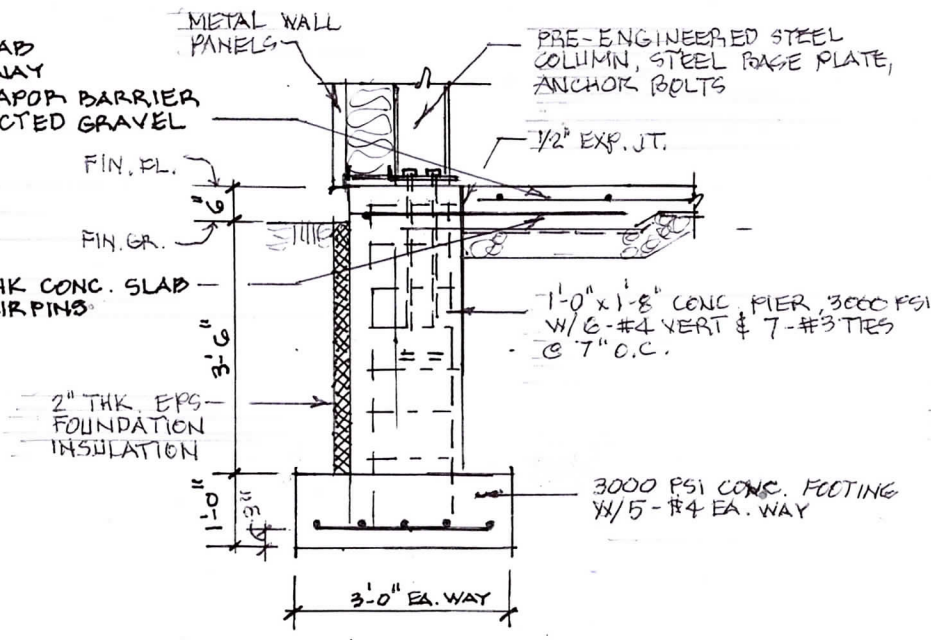

5 S2 SECTION
3/8" = 1'-0"

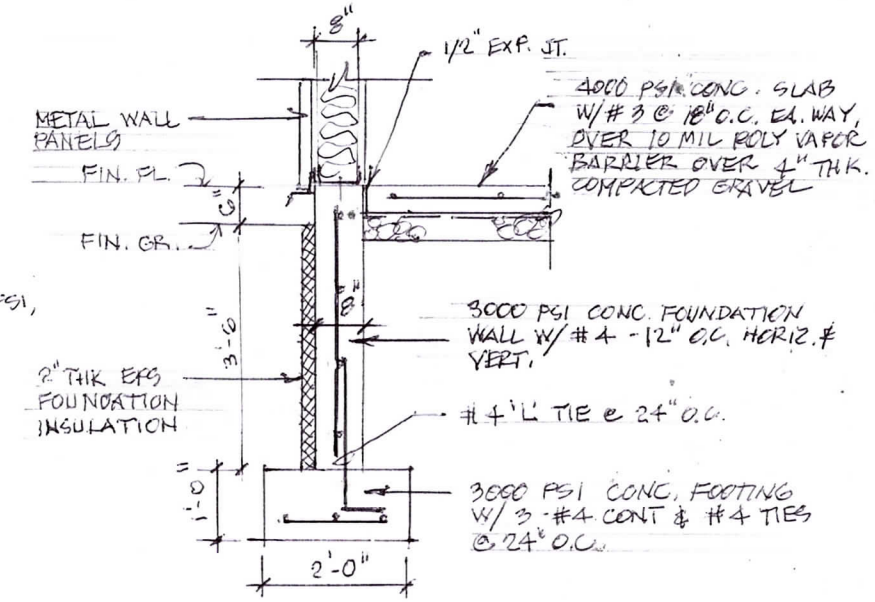

6 S2 SECTION
3/8" = 1'-0"

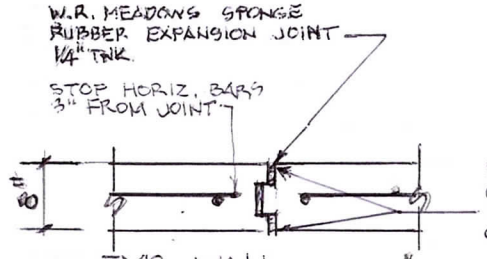

7 S2 TYP. WALL CONSTRUCTION JOINT (@ 40' O.C. MAX)
1/2" = 1'-0"

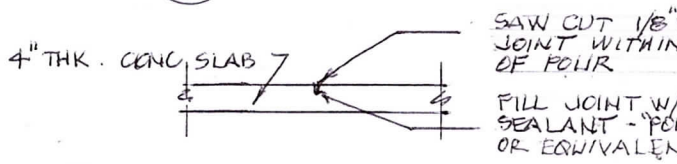

8 S2 TYP. SLAB CONTROL JOINT
3/8" = 1'-0"

L.L. JIRSA ARCHITECT
PO BOX 929
MITCHELL, SD. 57301
605-770-6404
email: lljirsa@interstellartelecom.net

REGISTERED ARCHITECT
REG. NO. 4995
LARRY L. JIRSA
SOUTH DAKOTA
8-24-22

PROJECT NAME
ADDITION TO 4-H BUILDING
23237 405TH AVE. E
FOREST BURG, SD

REVISIONS

NO.	DATE	DESCRIPTION

PROJECT NO.
703-2022

DATE
AUG 24, 2022

SHEET TITLE
FOUNDATION DETAILS

SHEET NO.
S-2

GENERAL PLUMBING NOTES:

1. ALL NEW PLUMBING WORK SHALL COMPLY WITH THE 2015 UNIFORM PLUMBING CODE BY A LICENSED PLUMBING CONTRACTOR IN THE STATE OF SOUTH DAKOTA.
2. ALL REQUIRED PERMITS AND INSPECTIONS SHALL BE RESPONSIBILITY OF PLUMBING CONTRACTOR.
3. ALL PLUMBING FIXTURES AND INSTALLATIONS SHALL COMPLY WITH AMERICANS WITH DISABILITIES ACT DESIGN GUIDELINES.
4. PLUMBING CONTRACTOR SHALL FIELD VERIFY EXISTING CONDITIONS AND TIE NEW PLUMBING PIPING TO EXISTING WATER AND SANITARY SEWER SYSTEMS.
5. PLUMBING CONTRACTOR SHALL FIELD VERIFY SIZES OF EXISTING PIPING WHERE NEW TIE-INS ARE LOCATED AND PROVIDE SIZES OF NEW PIPING TO COMPLY WITH CODE. ALL NEW PIPING INCLUDES SANITARY SEWER, WASTE, VENT, WATER PIPING, VALVES, FITTINGS. FIXTURES, FAUCETS AND REQUIRED ACCESSORIES FOR A COMPLETE INSTALLATION. FIXTURES TO BE WHITE PORCELAIN, TANK TYPE TOILETS, WALL MOUNTED LAVATORIES, ADA COMPLIANT FAUCETS AND FIXTURES.

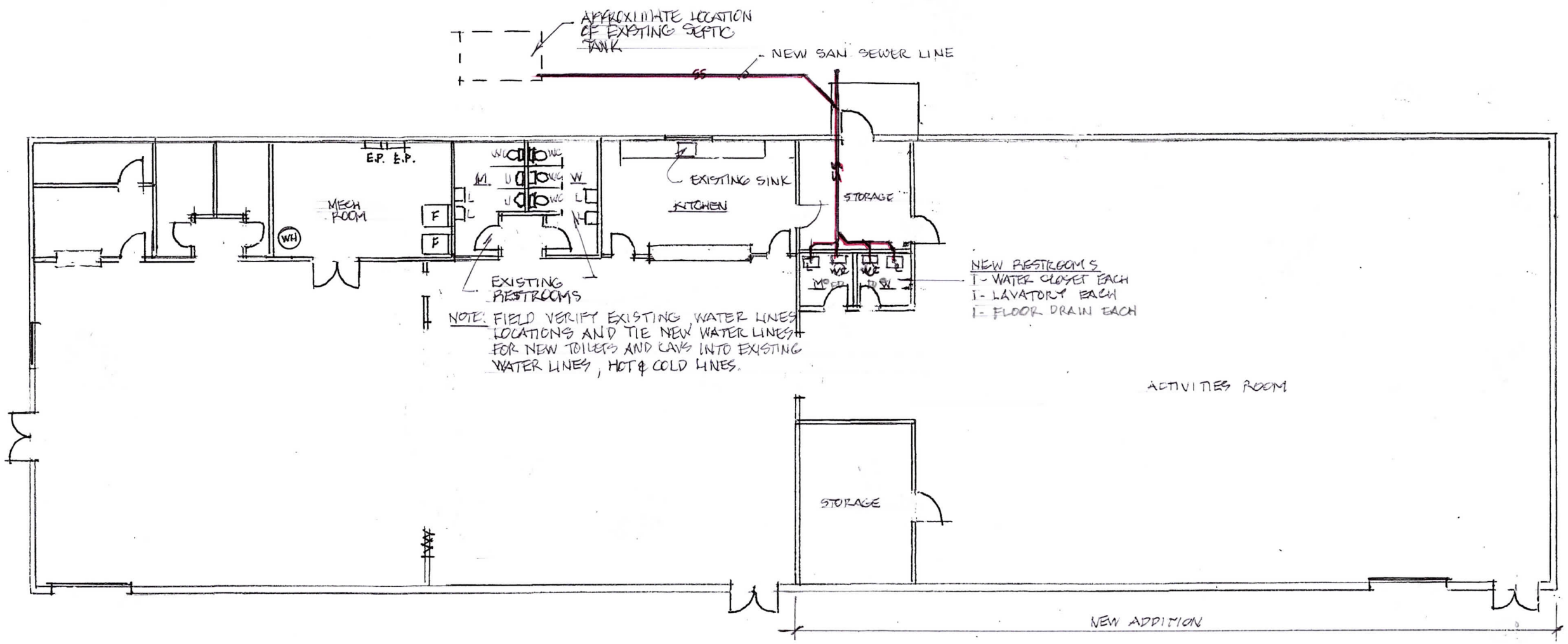

1 / P1 PLUMBING PLAN
1/16" = 1'-0"

L.L. JIRSA ARCHITECT
PO BOX 929
MITCHELL, SD 57301
605-770-6444
email: ljirsaarchitect@gmail.com

REGISTERED ARCHITECT
REG. NO. 4095
LARRY L JIRSA
SOUTH DAKOTA
8-24-22

PROJECT NAME: ADDITION TO 4-H BUILDING
23237 405TH AVE. E.
FORESTBURG, SD

REVISIONS

NO.	DATE	DESCRIPTION

PROJECT NO: 703-2022
DATE: AUG 24, 2022
SHEET TITLE: PLUMBING PLAN
SHEET NO: P-1

GENERAL MECHANICAL NOTES:

1. MECHANICAL CONTRACTOR TO PROVIDE DESIGN/BUILD SERVICES FOR NEW 6,000 SF ADDITION. NEW SYSTEM TO BE SIMILAR TO EXISTING HVAC SYSTEM IN EXISTING BUILDING. MECHANICAL CONTRACTOR TO FIELD VERIFY EXISTING SYSTEM.
2. ALL NEW HVAC WORK SHALL COMPLY WITH 2021 INTERNATIONAL MECHANICAL CODE AND BE DESIGNED BY A LICENSED MECHANICAL ENGINEER WHERE REQUIRED BY LOCAL CODES AND ORDINANCES.
3. ALL MECHANICAL WORK SHALL BE COORDINATED WITH NEW ELECTRICAL WORK AND PLUMBING WORK WHERE REQUIRED

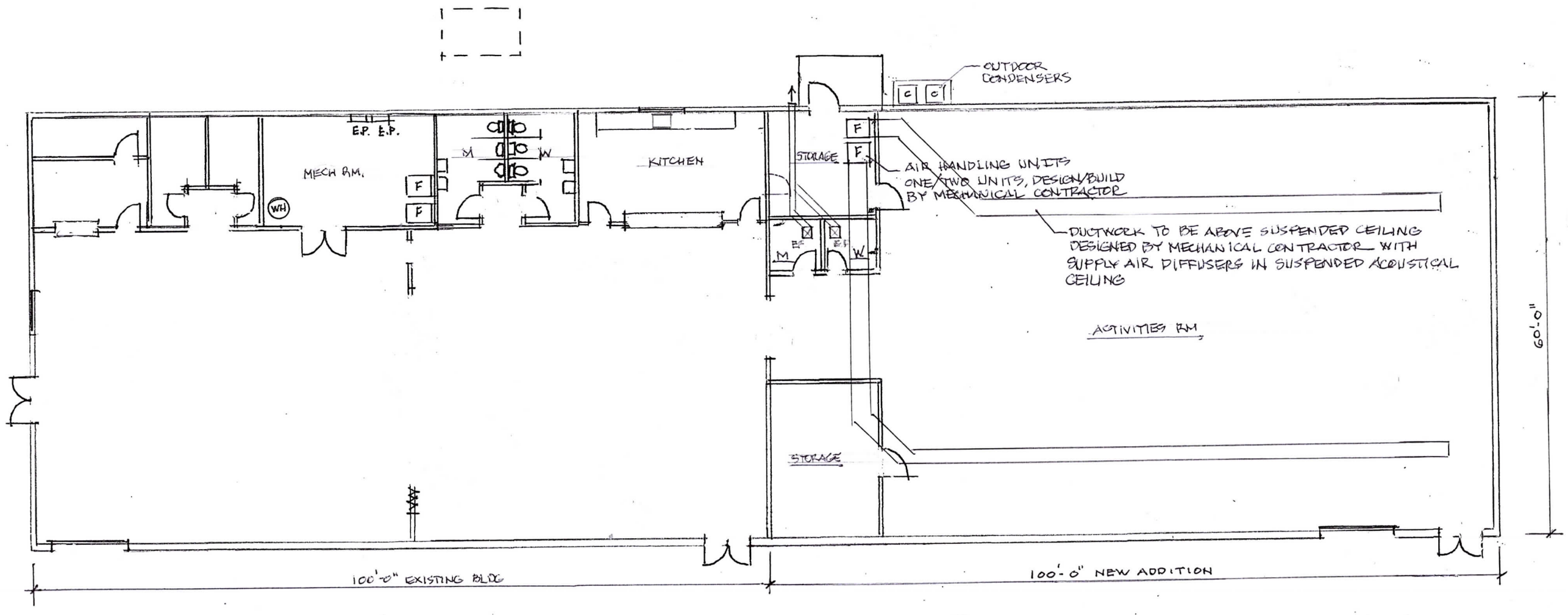

1 / M-1 MECHANICAL PLAN
1/16" = 1'-0"

L.L. JIRSA ARCHITECT
PO BOX 925
MITCHELL, SD 57301
605-770-6424
email: lljirsaarchitect@gmail.com

REGISTERED ARCHITECT
REG. NO. 4995
LARRY L. JIRSA
SOUTH DAKOTA
8-24-22

PROJECT NAME
ADDITION TO 4-H BUILDING
23237 405TH AVE. E
FORESTBURG, SD

REVISIONS

NO.	DATE	DESCRIPTION

PROJECT NO. 703-2022

DATE AUG 24, 2022

SHEET TITLE HVAC PLAN

SHEET NO. M-1

GENERAL ELECTRICAL NOTES:

1. ELECTRICAL WORK TO BE DESIGN/BUILD BY ELECTRICAL CONTRACTOR TO COMPLY WITH CURRENT NEC BY A LICENSED ELECTRICAL CONTRACTOR IN ACCORDANCE TO LOCAL CODES AND ORDINANCES, ELECTRICAL DESIGN WORK TO BE BY LICENSED ELECTRICAL ENGINEER WHERE REQUIRED BY LOCAL CODES AND ORDINANCES.
2. ELECTRICAL CONTRACTOR SHALL FIELD VERIFY EXISTING ELECTRICAL SERVICE AND EXISTING ELECTRICAL LOADS AND PROVIDE INCREASED ELECTRICAL SERVICE/DISTRIBUTION PANEL WHERE REQUIRED BY NEW ELECTRICAL LOADS FOR HVAC EQUIPMENT, LIGHTING AND POWER OUTLETS.
3. ELECTRICAL LOADS FOR HVAC EQUIPMENT TO BE VERIFIED WITH HVAC CONTRACTOR.
4. ALL NEW LIGHTING TO BE LED TYPE LIGHTING SELECTED BY CONTRACTOR. SWITCHED AS SHOWN ON PLAN BELOW.

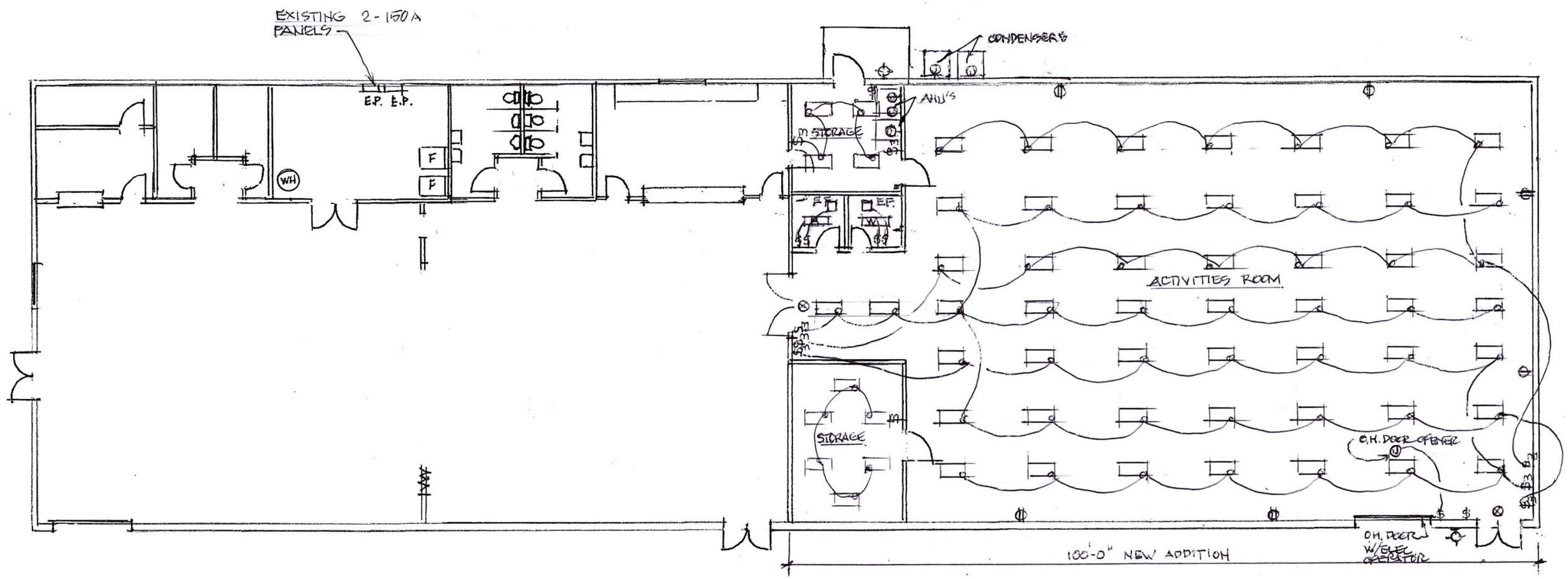

1 / E-1 ELECTRICAL PLAN

1/16" = 1'-0"

LEGEND

- 2x4 LED LAY-IN LIGHT
- 1x2 LED SURFACE MOUNTED LIGHT
- EXIT & EMERGENCY LIGHT
- $ - TWO WAY SWITCH
- ⊕ - DUPLEX OUTLET
- Ⓙ - JUNCTION BOX
- E.F. - EXHAUST FAN
- $3 - THREE WAY SWITCH
- ⊙ - WALL MOUNTED LED EXTERIOR LIGHT W/PHOTO CELL

L.L. JIRSA ARCHITECT
PO BOX 929
MITCHELL, SD 57301
605-770-6404
email: ljirsaarchitect@hotmail.com

REGISTERED ARCHITECT
REG. NO. 4995
LARRY L. JIRSA
SOUTH DAKOTA
8-24-22

PROJECT NAME: ADDITION TO 4-H BUILDING
23237 405TH AVE E
FOREST BURG, SD

REVISIONS

NO.	DATE	DESCRIPTION

PROJECT NO: 703-2022
DATE: AUG 24, 2022
SHEET TITLE: ELECTRICAL PLAN
SHEET NO: E-1